8-Port 10/100TX 802.3at PoE + 2-Port Gigabit TP/SFP Combo Web Smart Ethernet Switch



Ideal Cost-effective Solution for Secure IP Surveillance Infrastructure

Particularly designed for the growing popular IP surveillance applications, PLANET FGSD-1008HPS 802.3at PoE Web Smart Switch is positioned as a surveillance switch with the central management of remote power control and IP camera monitoring. The FGSD-1008HPS provides cost-effective, non-blocking wire-speed performance and intelligent PoE functions along with 8 10/100BASE-TX ports featuring 30-watt 802.3at PoE+ with RJ45 copper interfaces and 2 Gigabit TP/SFP combo interfaces, supporting high-speed transmission of surveillance images and videos.

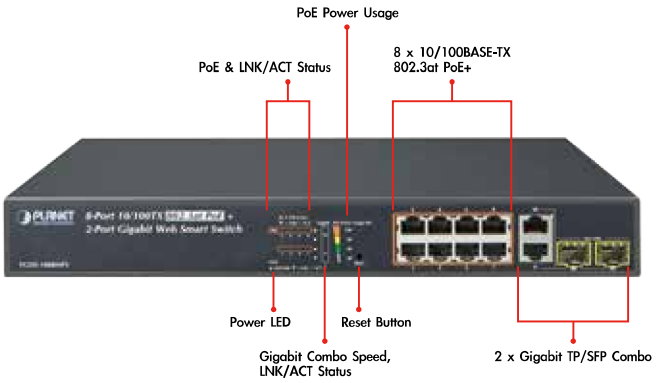

Perfectly-integrated Solution for PoE IP Camera and NVR System

Being different from the general IT industry PoE switch which usually contains 12 or 24 PoE ports, the FGSD-1008HPS provides eight 802.3at PoE+ ports for catering to medium to large scale of IP surveillance networks at a lower total cost. With its 5.6Gbps high-performance switch architecture and 125-watt PoE power budget, the recorded video files from the 8 PoE IP cameras can be powered by the FGSD-1008HPS and saved in the 8-channel NVR systems or surveillance software to perform comprehensive security monitoring. For instance, one FGSD-1008HPS can be combined with one 8-channel NVR and 8 PoE IP cameras as a kit for the administrators to centrally and efficiently manage the surveillance system in the local LAN and the remote site via Internet.

Physical Port

- 8-port 10/100BASE-TX RJ45 copper with PoE in-line supported
- 2-port 10/100/1000BASE-T RJ45 copper
- 2 1000BASE-X mini-GBIC/SFP slots to share with Port-9 to Port-10
- Reset button for system management

PoE

- Complies with IEEE 802.3at High Power over Ethernet End-span PSE
- Complies with IEEE 802.3af Power over Ethernet End-span PSE
- Up to 8 IEEE 802.3at / 802.3af devices powered
- 125 watts PoE budget
- Supports PoE Power up to 30.8 watts for each PoE port
- Detects powered device (PD) automatically
- Circuit protection prevents power interference between ports
- Remote power feeding up to 100m
- PoE Management
  - Per port PoE function enable/disable
  - PoE Port Power feeding priority
  - Per PoE port power limit
  - PD classification detection
  - PoE Power sequential

Layer 2 Features

- Auto-MDI/MDI-X detection on each RJ45 port
- Prevents packet loss with back pressure (half-duplex) and IEEE 802.3x pause frame flow control (full-duplex)
- Supports broadcast storm control
- Supports VLAN
  - IEEE 802.1Q tag-based VLAN, up to 30 VLANs groups, out of 4094 VLAN IDs
  - Port-based VLAN, up to 10 VLAN groups
  - MTU VLAN (Multi-tenant Unit VLAN)
- Supports Link Aggregation
  - 802.3ad Link Aggregation Control Protocol (LACP)
  - Cisco ether-channel (static trunk)
  - Maximum 3 trunk / LACP groups, up to 4 ports per trunk / LACP group

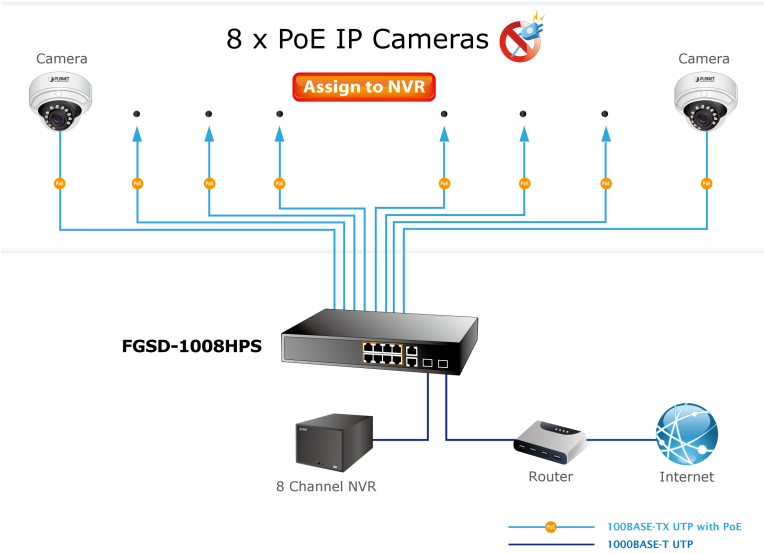

Intelligent LED Indicator for Real-time PoE Usage

The FGSD-1008HPS helps users to monitor the current status of PoE power usage easily and efficiently by its advanced LED indication. Called “PoE Power Usage”, the front panel of the FGSD-1008HPS Fast Ethernet PoE+ Switch has four orange LEDs indicating 30W, 60W, 90W and 120W of PoE power usage.



Robust Layer 2 Features

The FGSD-1008HPS can be programmed for advanced switch management functions such as dynamic port link aggregation (LACP), Spanning Tree Protocol (STP), IGMP Snooping v1, v2, bandwidth control and L2/L4 security control. The FGSD-1008HPS provides IEEE 802.1Q tagged VLAN, port-based VLAN and MTU VLAN. The VLAN groups allowed will be maximally up to 30. Via aggregation of supporting ports, the FGSD-1008HPS allows the operation of a high-speed trunk combining multiple ports and supports fail-over as well.

Flexible and Extendable Uplink Solution

The FGSD-1008HPS provides 2 extra Gigabit TP/SFP combo interfaces supporting 10/100/1000BASE-T RJ45 copper to connect with surveillance network devices such as NVR, Video Streaming Server or NAS to facilitate surveillance management. Or through these fiber SFP slots, it can also connect with the 1000BASE-SX/LX SFP (Small Form-factor Pluggable) fiber transceiver to uplink to backbone switch and monitoring center in long distance. The distance can be extended from 550m to 2km (multi-mode fiber), even going up to above 10/20/30/40/50/60/70/120 kilometers (single-mode fiber or WDM fiber). They are well suited for applications within the enterprise data centers and distributions.

- Supports Spanning Tree Protocol
  - STP, IEEE 802.1D Spanning Tree Protocol
  - RSTP, IEEE 802.1w Rapid Spanning Tree Protocol
- Port mirroring to monitor the incoming or outgoing traffic on a particular port, many-to-1
- Loopback protection to avoid broadcast loops

Quality of Service

- Ingress / Egress Rate Limit per port bandwidth control
- 2 priority queues on all switch ports
- Traffic classification
  - Port-based priority
  - IEEE 802.1p-based priority
  - IP TOS / DSCP-based priority
  - TCP / UDP port-based QoS
- Strict priority and Weighted Round Robin (WRR) CoS policies

Multicast

- Supports IGMP Snooping v1 and v2

Security

- Physical port to MAC address binding
- TCP/UDP port number filter: Forwarding or discarding typical network applications

Management

- Switch Management Interfaces
  - Web switch management
  - SNMP v1 / v2c switch management
- Supports DHCP Option82 and DHCP Relay
- Firmware upload/download via HTTP
- Configuration upload/download through HTTP
- Hardware reset button for system reboot or reset to factory default
- PLANET Smart Discovery Utility

Applications

PoE IP Surveillance with Extended Network Infrastructure for SMBs / Workgroups

Providing 8 10/100BASE-T PoE ports, in-line power interfaces and two Gigabit TP/SFP Combo interfaces, the FGSD-1008HPS can easily build an IP surveillance system in which its power is centrally controlled for the enterprises. It can work with one 8-channel NVR to perform comprehensive security monitoring with 8 IP cameras via one Gigabit TP/SFP Combo port. The FGSD-1008HPS comes with non-blocking design, desktop size and SFP fiber-optic modules, bringing network infrastructure to higher flexibility but lower in cost.

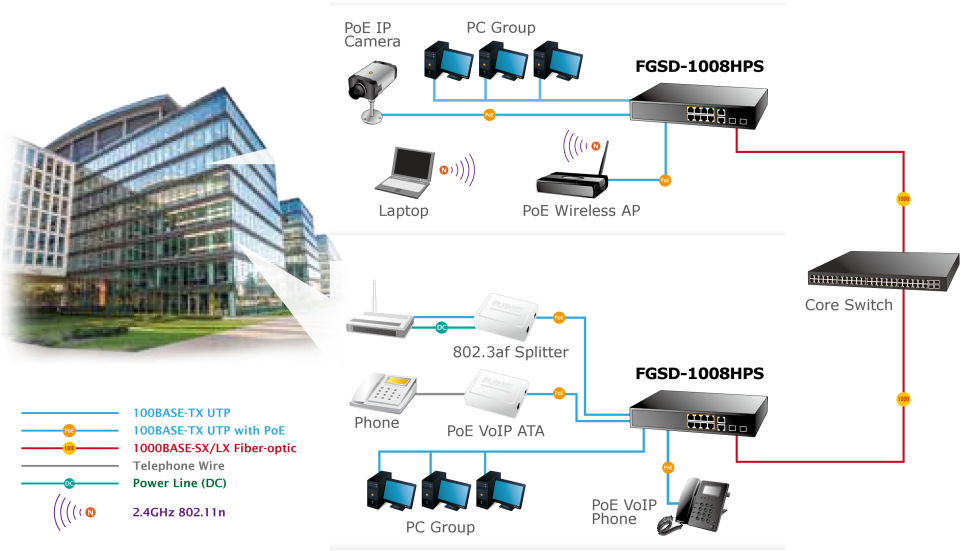

Rapid Spanning Tree Protocol for Efficient Network System

The FGSD-1008HPS features strong rapid self-recovery capability to prevent interruptions and external intrusions. It incorporates Rapid Spanning Tree Protocol (802.1w RSTP) into customer's automation network to enhance system reliability and uptime.

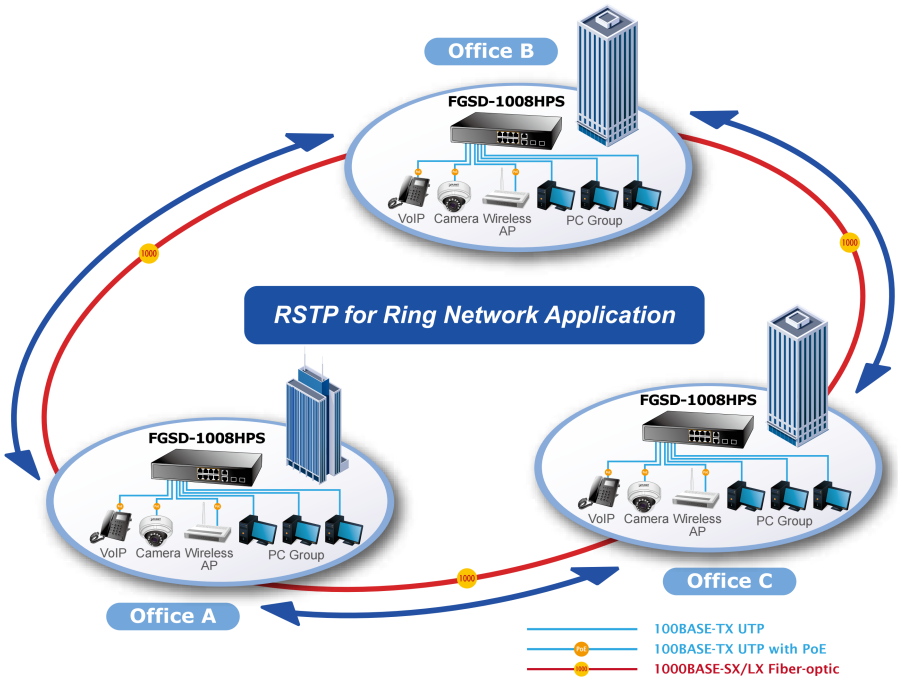

Specifications

Model		FGSD-1008HPS
Hardware Specifications		
10/100Mbps Copper Ports		8 10/100BASE-TX RJ45 Auto-MDI/MDI-X ports
Gigabit Copper Ports		2 10/100/1000BASE-T RJ45 Auto-MDI/MDI-X ports
SFP/mini-GBIC Slots		2 1000BASE-X SFP interfaces, shared with Port-9 to Port-10
Switch Architecture		Store-and-Forward
Switch Fabric		5.6Gbps / non-blocking
Throughput		4.16Mpps@64Bytes
Address Table		4K entries, automatic source address learning and ageing
Shared Data Buffer		2.75Mb embedded memory for packet buffers
Flow Control		IEEE 802.3x pause frame for full-duplex Back pressure for half-duplex
Maximum Transmit Unit		1536 Bytes
Reset Button		< 5 sec: System reboot > 5 sec: Factory default
Dimensions (W x D x H)		330 x 155 x 43.5 mm, 1U height
Weight		1.5kg
LED		**System:** Power (Green) **10/100BASE-TX RJ45 Interfaces (Port1 to Port8):** 10/100Mbps LNK/ACT (Green) PoE In-Use (Orange) **10/100/1000BASE-T RJ45 / SFP Interfaces (Port 9 to Port10):** LNK/ACT (Green) 100/1000 (Green) **PoE Usage** 30W, 60W, 90W, 120W (Orange)
Cable	Twisted-Pair	10BASE-T: 2-Pair UTP CAT. 3, 4, 5, up to 100 meters 100BASE-TX: 2-Pair UTP CAT. 5, 5e up to 100 meters 1000BASE-T: 4-Pair UTP CAT. 5e, 6 up to 100 meters
	Fiber-Optic Cable	**1000BASE-SX :** 50/125µm or 62.5/125µm multi-mode fiber optic cable, up to 550m (varying on SFP module) **1000BASE-LX :** 9/125µm single-mode fiber optic cable, up to 10/20/30/40/50/60/70/120 kilometers (varying on SFP module)
Power Requirements		100~240V AC, 50/60Hz, 2A
Power Consumption		Max. 150 watts / 511BTU
ESD Protection		Contact Discharge **8KV** DC Air Discharge **8KV** DC
Power over Ethernet		
PoE Standard		IEEE 802.3af / 802.3at PoE / PSE
PoE Power Supply Type		End-span
PoE Power Output		Per Port 52V DC, Max. 30.8 watts
Power Pin Assignment		1/2(+), 3/6(-)
PoE Power Budget		125 watts (max.)
PoE Ability	PD @ 7 watts	8 units
	PD @ 15.4 watts	8 units
	PD @ 30.8 watts	4 units
Layer 2 Functions		
Port Management		Port disable / enable Auto-negotiation 10/100/1000Mbps full and half duplex mode selection Flow Control disable / enable Bandwidth Control / Broadcast Storm Control
Port Status		Display each port's speed duplex mode, link status, flow control status, auto negotiation status
Port Mirroring		TX / RX / Both Many-to-1 monitor
VLAN		802.1Q tagged-based VLAN, up to 30 VLAN groups, out of 4094 VLAN IDs Port-based VLAN, up to 10 VLAN groups MTU VLAN
QoS		Allow to assign low / high priority on each port First-In-First-Out, All-High-before-Low, Weight-Round-Robin QoS policy
Security Control		MAC address binding TCP & UDP Filter
Spanning Tree Protocol		STP, IEEE 802.1D Spanning Tree Protocol RSTP, IEEE 802.1w Rapid Spanning Tree Protocol
Link Aggregation		2 groups of 4-Port 10/100BASE-TX trunk supported 1 group of 2-Port 10/100/1000BASE-T trunk supported

DHCP Relay	DHCP Relay Agent / DHCP Relay Server
PoE Setting	PoE Status / PoE Port Setting / PoE Sequential
Configuration Back / Restore	Configuration backup / restore through Web interface
IGMP Snooping	IGMP (v1 / v2) Snooping, up to 32 multicast groups
Management Functions	
Basic Management Interfaces	Web browser, SNMP v1 / v2c
Standards Conformance	
Regulation Compliance	FCC Part 15 Class A, CE
Standards Compliance	IEEE 802.3 Ethernet IEEE 802.3u Fast Ethernet IEEE 802.3ab Gigabit Ethernet IEEE 802.3z Gigabit Ethernet IEEE 802.3x Full-duplex flow control IEEE 802.1Q VLAN IEEE 802.1p QoS IEEE 802.1D Spanning Tree Protocol IEEE 802.1w Rapid Spanning Tree Protocol IEEE 802.3af Power over Ethernet IEEE 802.3at Power over Ethernet Plus
Environment	
Operating	Temperature: 0 ~ 50 degrees C Relative Humidity: 5 ~ 95% (non-condensing)
Storage	Temperature: -10 ~ 70 degrees C Relative Humidity: 5 ~ 95% (non-condensing)

Ordering Information

FGSD-1008HPS	8-Port 10/100TX 802.3at PoE + 2-Port Gigabit TP/SFP Combo Web Smart Ethernet Switch

Related PoE Products

ICA-2200	Full HD PoE Box IP Camera
ICA-2250VT	Industrial PoE Plus Outdoor IR IP Camera
ICA-2500	5 Mega-pixel PoE Box IP Camera
ICA-3250V	Full HD Outdoor IR PoE IP Camera
ICA-3350V	3 Mega-pixel Vari-focal Bullet IR IP Camera
ICA-4200V	Full HD 20M IR Vari-focal Dome IP Camera
ICA-4500V	5 Mega-pixel 20M IR Vari-focal Dome IP Camera
ICA-5250	Full HD Ultra-mini Vandal Dome
ICA-5350V	3 Mega-pixel Vandalproof IR IP Camera
ICA-HM127	3 Mega-pixel H.264 Box IP Camera
ICA-HM132	H.264 2 Mega-pixel 20M IR Vari-focal Dome IP Camera
ICA-HM136	H.264 2 Mega-pixel 20M IR Vandalproof Dome IP Camera
ICA-HM312	2 Mega-pixel 25M IR Outdoor Bullet PoE IP Camera
ICA-HM316	2 Mega-pixel Outdoor IR PoE IP Camera
ICA-HM351	2 Mega-pixel 35M IR Outdoor Box PoE IP Camera
ICA-HM620	2 Mega-pixel PoE Plus Speed Dome Internet Camera
POE-162S	IEEE 802.3at Gigabit High Power over Ethernet Splitter
POE-E201	IEEE 802.3at Power over Ethernet Extender
WNAP-W2200	802.11n 300Mbps In-Wall Access Point w/ USB Charger (EU Type)
WDAP-C7400	900Mbps Dual Band Ceiling-mount Wireless Access Point
WNAP-7350	5GHz 300Mbps 802.11a/n Outdoor Wireless Access Point
VIP-256PT	802.3af PoE SIP IP Phone
VIP-2020PT	Enterprise HD PoE IP Phone (2-Line)
VIP-5060PT	Professional HD PoE IP Phone (6-Line)

SFP Gigabit Modules are available for the FGSD-1008HPS

Gigabit Ethernet Transceiver (1000BASE-X SFP)

Model	Speed (Mbps)	Connector Interface	Fiber Mode	Distance	Wavelength (nm)	Operating Temp.
MGB-GT	1000	Copper	--	100m	--	0 ~ 60°C
MGB-SX	1000	LC	Multi Mode	550m	850nm	0 ~ 60°C
MGB-SX2	1000	LC	Multi Mode	2km	1310nm	0 ~ 60°C
MGB-LX	1000	LC	Single Mode	10km	1310nm	0 ~ 60°C
MGB-L30	1000	LC	Single Mode	30km	1310nm	0 ~ 60°C
MGB-L50	1000	LC	Single Mode	50km	1550nm	0 ~ 60°C
MGB-L70	1000	LC	Single Mode	70km	1550nm	0 ~ 60°C
MGB-L120	1000	LC	Single Mode	120km	1550nm	0 ~ 60°C
MGB-TSX	1000	LC	Multi Mode	550m	850nm	-40 ~ 75°C
MGB-TLX	1000	LC	Single Mode	10km	1310nm	-40 ~ 75°C
MGB-TL30	1000	LC	Single Mode	30km	1310nm	-40 ~ 75°C
MGB-TL70	1000	LC	Single Mode	70km	1550nm	-40 ~ 75°C

Gigabit Ethernet Transceiver (1000BASE-BX, Single Fiber Bi-Directional SFP)

Model	Speed (Mbps)	Connector Interface	Fiber Mode	Distance	Wavelength (TX)	Wavelength (RX)	Operating Temp.
MGB-LA10 MGB-LB10	1000	WDM(LC)	Single Mode	10km	1310nm	1550nm	0 ~ 60°C
	1000	WDM(LC)	Single Mode	10km	1550nm	1310nm	0 ~ 60°C
MGB-LA20 MGB-LB20	1000	WDM(LC)	Single Mode	20km	1310nm	1550nm	0 ~ 60°C
	1000	WDM(LC)	Single Mode	20km	1550nm	1310nm	0 ~ 60°C
MGB-LA40 MGB-LB40	1000	WDM(LC)	Single Mode	40km	1310nm	1550nm	0 ~ 60°C
	1000	WDM(LC)	Single Mode	40km	1550nm	1310nm	0 ~ 60°C
MGB-LA60 MGB-LB60	1000	WDM(LC)	Single Mode	60km	1310nm	1550nm	0 ~ 60°C
	1000	WDM(LC)	Single Mode	60km	1550nm	1310nm	0 ~ 60°C
MGB-TLA10 MGB-TLB10	1000	WDM(LC)	Single Mode	10km	1310nm	1550nm	-40 ~ 75°C
	1000	WDM(LC)	Single Mode	10km	1550nm	1310nm	-40 ~ 75°C
MGB-TLA20 MGB-TLB20	1000	WDM(LC)	Single Mode	20km	1310nm	1550nm	-40 ~ 75°C
	1000	WDM(LC)	Single Mode	20km	1550nm	1310nm	-40 ~ 75°C
MGB-TLA40 MGB-TLB40	1000	WDM(LC)	Single Mode	40km	1310nm	1550nm	-40 ~ 75°C
	1000	WDM(LC)	Single Mode	40km	1550nm	1310nm	-40 ~ 75°C
MGB-TLA60 MGB-TLB60	1000	WDM(LC)	Single Mode	60km	1310nm	1550nm	-40 ~ 75°C
	1000	WDM(LC)	Single Mode	60km	1550nm	1310nm	-40 ~ 75°C

PLANET Technology Corporation

11F., No.96, Minquan Rd., Xindian Dist., New Taipei City 231, Taiwan (R.O.C.)

Tel: 886-2-2219-9518 Fax: 886-2-2219-9528

Email: sales@planet.com.tw www.planet.com.tw

C-FGSD-1008HPS

PLANET reserves the right to change specifications without prior notice. All brand names and trademarks are property of their respective owners. Copyright © 2015 PLANET Technology Corp. All rights reserved.